NOTES:

1. ASSEMBLE AND INSPECT PER SOP 620-7918.

2. COLOR DICTATED BY THE SALES ORDER.
   a. COLOR: -XX COLOR DESIGNATOR AS SPECIFIED IN SOP 620-8222.
   b. THE -XX CAN RESULT IN ONE COLOR FOR THE METAL SHROUD AND A DIFFERENT COLOR FOR THE METAL FRAME ALSO WITH A -XX LISTED ON THE BOM.
   c. THE -00XX IS THE COLOR DESIGNATOR FOR UPHOLSTERY.
   d. THE 5TH DESIGNATOR: "X" WITHIN -XXXXX DEFINES THE HEAD STRAP OR CUSTOM PRODUCTS BRAND. THIS IS SPECIFIED ON SALES ORDERS.
   e. <PARA >THE -XXXXX IS CREATED BY COMBINING THE -XX, -00XX AND THE 5TH DESIGNATOR.

3. ALL X'S SHOULD BE DEFINED ON THE SALES ORDER.

4. TORQUE SPECIFICATIONS:
   a. 6mm - 10 to 13.5 N-m, 8 to 10 lbs-ft
   b. 8mm 25.5 to 28.5 N-m, 19 to 21 lbs-ft
   c. 10mm - 55.5 to 58 N-m, 41 to 43 lbs-ft

5. STICKER PLACEMENT, PRIOR TO APPLYING STICKERS WASH/WIPE USING ALCOHOL (ISOPROPYL), AMMONIA AND/OR A 5% SODIUM HYPOCHLORITE TO WATER SOLUTION (CLOROX).
   a. STICKER TO BE PLACED ON CENTER LINE OF TUBE HEIGTH AND WIDTH.
   b. STICKER TO BE PLACED ON CENTER LINE OF TUBE WIDTH.
   c. STICKER TO BE PLACED ON CENTER LINE OF TUBE HEIGTH.

REVISION HISTORY

REV	DATE	DESCRIPTION	ECO	BY
A	7/13/2018	RELEASE FOR PRODUCTION	15983	RLH
B	9/6/2018	BELT ASSY. CHANGED PN:731-8305, WELDMENT CHANGED PN:731-8256-XX	16012	RLH
C	11/1/2018	CHANGES MADE TO731-8256-XX, 731-8305, REMOVE (4) 731-0363, (8) 731-0367, (4) 731-2399, ADD (1)740,8164, (2)731-0355, (2) 731-0365	16034	RLH
D	11/15/2018	PART NUMBER IS WRONG, IS 731-8474 WAS 731-8305	16040	RLH

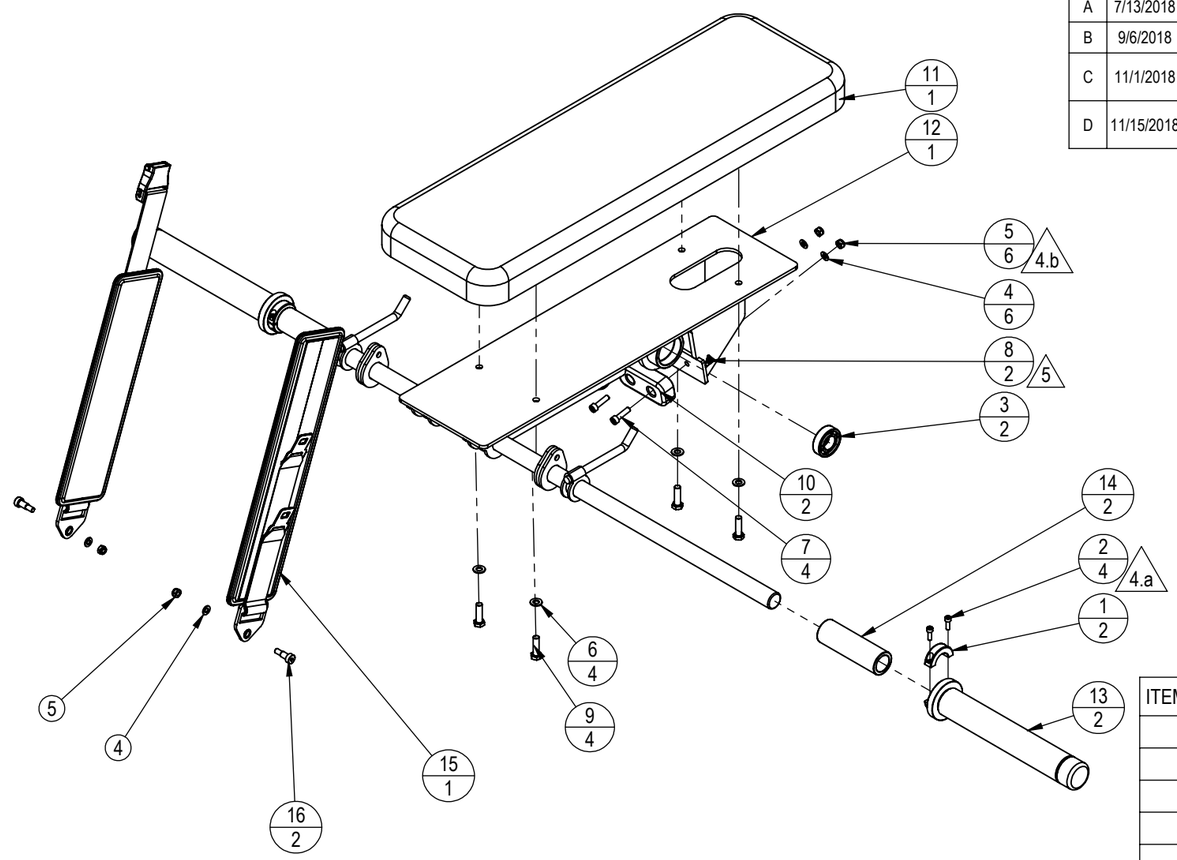

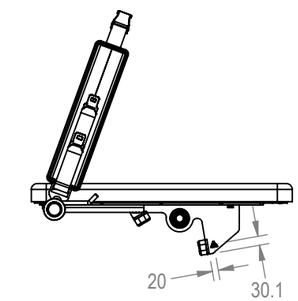

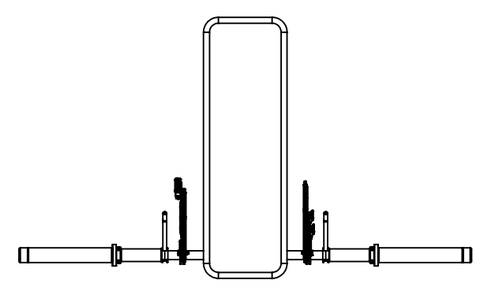

ITEM NO.	PART NUMBER	DESCRIPTION	QTY.
1	130-1778-001	COLLAR,SPLIT,SLIP SIDE	2
2	130-1778-003	SCREW,M6,SHCS	4
3	731-0137	BEARING,52 OD,25 ID,X 15MM	2
4	731-0355	WASHER,PLAIN,M8,NARROW	6
5	731-0365	NUT,M8 X 1.25,NYLOC JAM	6
6	731-0367	WASHER,PLAIN,M10	4
7	731-0421	SCREW, M8 X 1.25, 30MM, SHC, HK, CS	4
8	731-0512	STICKER,WARNING,PINCH	2
9	731-2399	SCREW,M10X1.0,35MM,HHC,HE,CS,BZ	4
10	731-2762	RUBBER BUMPER	2
11	731-8255-00XX	ASSY,BACK REST	1
12	731-8256-XX	WELD,BACK & BAR,SWIVEL	1
13	731-8267	WEIGHT HORN,GLUTE DRIVE	2
14	731-8280	BUSHING,WEAR GUARD	2
D 15	731-8474	ASSY,BELT,GLUTE DRIVE	1
16	740-8164	SCREW, M10X1.5, 16mm, SHSS	2

DOCUMENT STATUS:
ECO

NOTICE OF PROPRIETARY INFORMATION

THIS DOCUMENT SHALL NOT BE REPRODUCED NOR SHALL THE INFORMATION CONTAINED HEREIN BE USED BY OR DISCLOSED TO OTHER EXCEPT AS EXPRESSLY AUTHORIZED BY CORE HEALTH & FITNESS, LLC.

CLASS OF WORK		UNLESS OTHERWISE SPECIFIED DIMS ARE IN mm. TOLERANCES FOR MEASURE OF LENGTH ARE:						ANGLES = ±2°	
		0.5 to 3	> 3 to 6	> 6 to 30	> 30 to 120	> 120 to 400	> 400 to 1000	> 1000 to 2000	> 2000
FINE		±0.05	±0.05	±0.1	±0.15	±0.2	±0.3	±0.5	-----
MEDIUM	X	±0.1	±0.1	±0.2	±0.3	±0.5	±0.8	±1.2	±2
COARSE		±0.2	±0.3	±0.5	±0.8	±1.2	±2	±3	±4
VERY COARSE		-----	±0.5	±1	±1.5	±2.5	±4	±6	±8

MATERIAL
SEE BOM

FINISH
SEE BOM

VENDOR: P/N:

THIRD ANGLE PROJECTION

	INITIAL	DATE
DRAWN	RLH	11/09/2018
CHECKED		
APPROVED		
	U.O.M.	MM

CORE HEALTH & FITNESS, LLC
4400 NE 77th Ave., Suite 300
Vancouver, WA 98662

CORE PART NO: 731-8254-XXXX
REV: D

TITLE: ASSY,SEAT BACK W/BAR

SCALE: 1:10 | SHEET 1 OF 1 | SHEET SIZE: B

NOTES:

1. ASSEMBLE AND INSPECT PER SOP 620-7918.

2. COLOR DICTATED BY THE SALES ORDER.
   a. COLOR: -XX COLOR DESIGNATOR AS SPECIFIED IN SOP 620-8222.
   b. THE -XX CAN RESULT IN ONE COLOR FOR THE METAL SHROUD AND A DIFFERENT COLOR FOR THE METAL FRAME ALSO WITH A -XX LISTED ON THE BOM.
   c. THE -00XX IS THE COLOR DESIGNATOR FOR UPHOLSTERY.
   d. THE 5TH DESIGNATOR: “X” WITHIN -XXXXX DEFINES THE HEAD STRAP OR CUSTOM PRODUCTS BRAND. THIS IS SPECIFIED ON SALES ORDERS.
   e. <PARA >THE -XXXXX IS CREATED BY COMBINING THE -XX, -00XX AND THE 5TH DESIGNATOR.

3. ALL X’S SHOULD BE DEFINED ON THE SALES ORDER.

4. TORQUE SPECIFICATIONS:
   a. 6mm - 10 to 13.5 N-m, 8 to 10 lbs-ft
   b. 8mm 25.5 to 28.5 N-m, 19 to 21 lbs-ft
   c. 10mm - 55.5 to 58 N-m, 41 to 43 lbs-ft

5. STICKER PLACEMENT, PRIOR TO APPLYING STICKERS WASH/WIPE USING ALCOHOL (ISOPROPYL), AMMONIA AND/OR A 5% SODIUM HYPOCHLORITE TO WATER SOLUTION (CLOROX).
   a. STICKER TO BE PLACED ON CENTER LINE OF TUBE HEIGTH AND WIDTH.
   b. STICKER TO BE PLACED ON CENTER LINE OF TUBE WIDTH.
   c. STICKER TO BE PLACED ON CENTER LINE OF TUBE HEIGTH.

REVISION HISTORY

REV	DATE	DESCRIPTION	ECO	BY
A	7/12/2018	RELEASE FOR PRODUCTION	15983	RLH
B	9/10/2018	UPDATES TO PN"S: 731-8220-XX,731-8254-XXXX,731-8351-XX, IS 731-8166-XX WAS 731-8166, IS 731-8271-XX WAS 731-8271	16012	RLH
C	10/19/2018	REMOVE (4) 731-2522, IS 731-8365 WAS 731-8243, CHANGE FOOT PLATE TO RUBBER COVERED FOOT PLATE	16026	RLH
D	11/2/2018	CHANGES MADE TO 731-8254-XXXX	16034	RLH
E	4/13/2020	IS 731-8833 WAS 731-8271-XX, REMOVED 731-0355, 731-0365, 731-8307-XX	20056	RLH

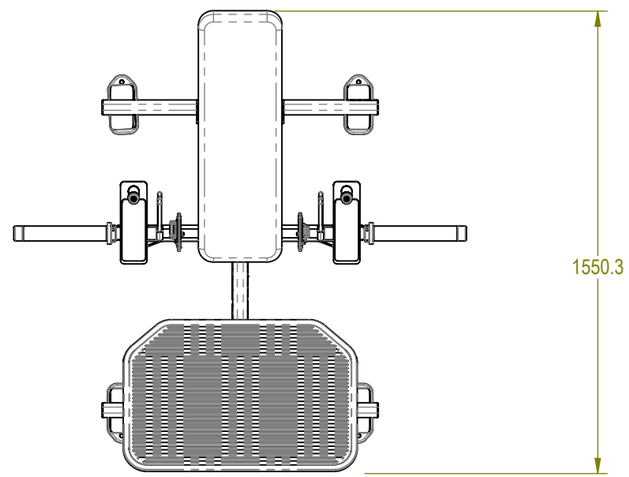

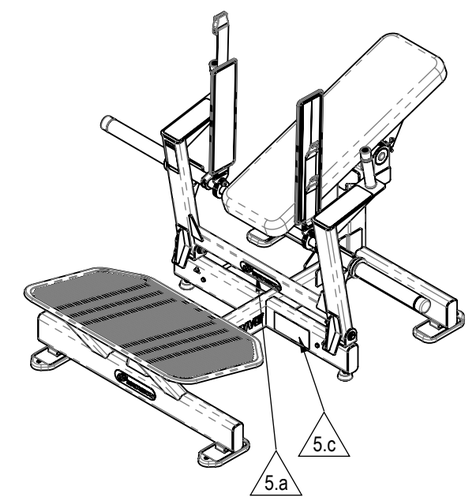

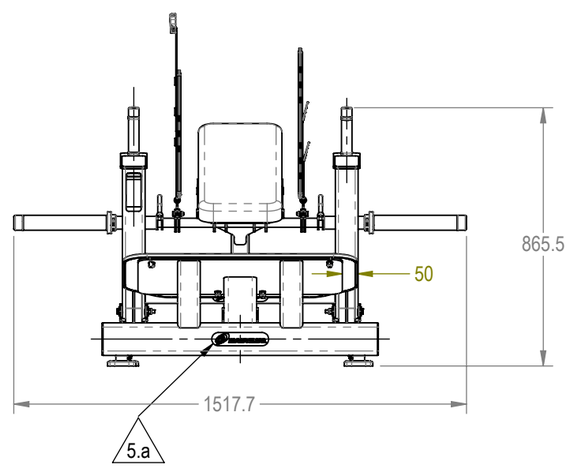

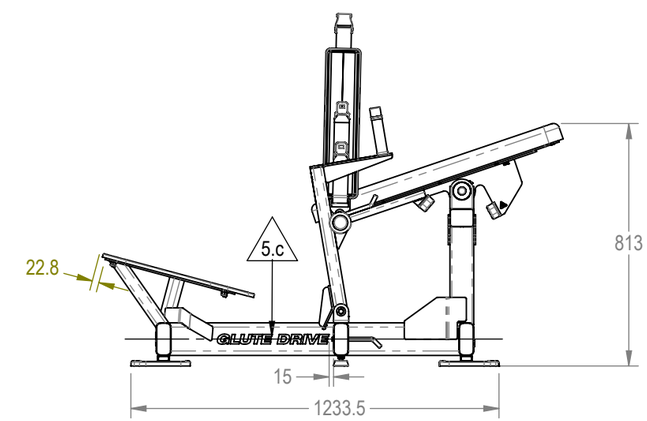

DOCUMENT STATUS:
Released

NOTICE OF PROPRIETARY INFORMATION

THIS DOCUMENT SHALL NOT BE REPRODUCED NOR SHALL THE INFORMATION CONTAINED HEREIN BE USED BY OR DISCLOSED TO OTHER EXCEPT AS EXPRESSLY AUTHORIZED BY CORE HEALTH & FITNESS, LLC.

CLASS OF WORK		UNLESS OTHERWISE SPECIFIED DIMS ARE IN mm. TOLERANCES FOR MEASURE OF LENGTH ARE:							ANGLES = ±2°
		0.5 to 3	> 3 to 6	> 6 to 30	> 30 to 120	> 120 to 400	> 400 to 1000	> 1000 to 2000	> 2000
FINE		±0.05	±0.05	±0.1	±0.15	±0.2	±0.3	±0.5	-----
MEDIUM	X	±0.1	±0.1	±0.2	±0.3	±0.5	±0.8	±1.2	±2
COARSE		±0.2	±0.3	±0.5	±0.8	±1.2	±2	±3	±4
VERY COARSE		-----	±0.5	±1	±1.5	±2.5	±4	±6	±8

MATERIAL
SEE BOM

FINISH
SEE NOTES

VENDOR: LAND AMERICA P/N:

THIRD ANGLE PROJECTION

	INITIAL	DATE
DRAWN	Randy Hansen	11/9/2018
CHECKED		
APPROVED		
	U.O.M.	MM

CORE HEALTH & FITNESS, LLC
4400 NE 77th Ave., Suite 300
Vancouver, WA 98662

CORE PART NO: NP-L1131-XXXXX
REV: E

TITLE: NP,GLUTE DRIVE

SCALE: 1:20 | SHEET 1 OF 2 | SHEET SIZE: B

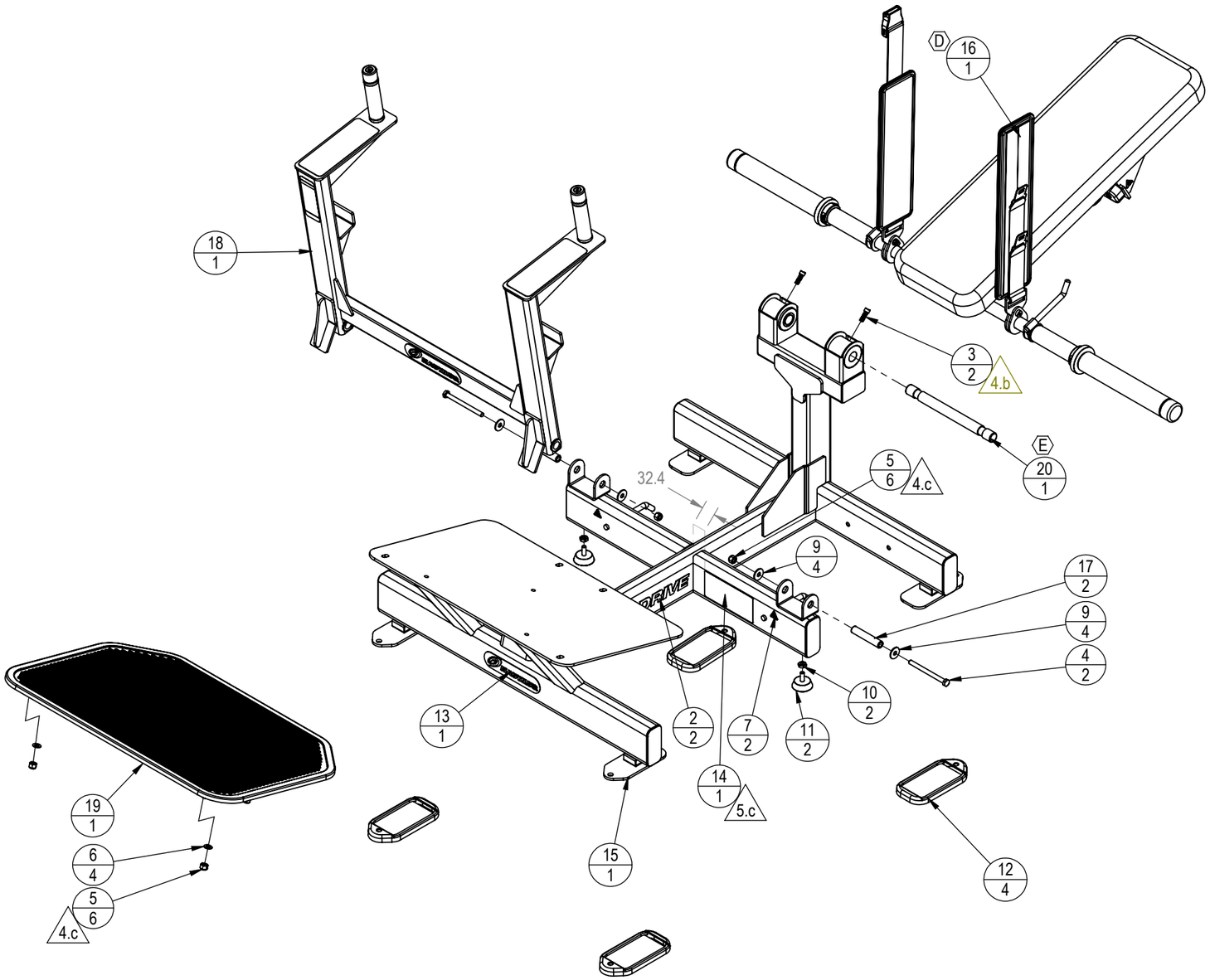

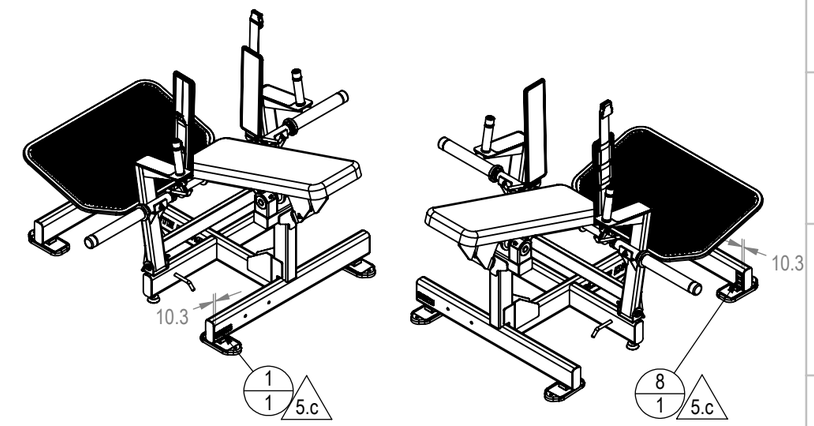

	ITEM NO.	PART NUMBER	DESCRIPTION	QTY.
	1	050-5457	Label, S/N, Non-Powered, Primary, Core H&F	1
	2	050-5594	BADGE,NAME,GLUTE DRIVE	2
	3	110-3568	SCREW, M8x1.25, 25mm, SHC, HK, AS, BEC, NP, Gr 12.9	2
	4	110-3805	SCREW,M10x1.5,120mm,HHC,HE,AS,ZC,GR12.9	2
	5	731-0363	NUT,M10X1.5,NYLOC	6
	6	731-0367	WASHER,PLAIN,M10	4
	7	731-0512	STICKER,WARNING,PINCH	2
	8	731-0517	STICKER, WARNING, BOLT DOWN	1
	9	731-2346	WASHER,M10,FENDER,BZ	4
	10	731-2446	NUT,3/8 -16,JAM	2
	11	731-2447	FOOT,ADJ,3/8-16	2
	12	731-2647	FOOT,LONG,LEVERAGE	4
	13	731-7311	STICKER,NAUTILUS,DECO,45MMX191MM	1
	14	731-7920	STICKER,WARNING,NP STANDARD INSTRUCTIONS	1
	15	731-8220-XX	WELD,BASE,GLUTE DRIVE	1
	16	731-8254-XXXX	ASSY,SEAT BACK W/BAR	1
	17	731-8304	SHAFT,PIVOT,BAR CATCH	2
	18	731-8351-XX	ASSY,BAR CATCH,GLUTE DRIVE	1
	19	731-8365	ASSY,FOOT PAD,GLUTE DRIVE	1
E	20	731-8833	SHAFT,PIVOT,BACK PAD,GD	1

CORE HEALTH & FITNESS, LLC
4400 NE 77th Ave., Suite 300
Vancouver, WA 98662

CORE PART NO **NP-L1131-XXXXX** REV **E**

TITLE NP,GLUTE DRIVE

SCALE: 1:12 | SHEET 2 OF 2 | SHEET SIZE: B

REVISION HISTORY				
REV	DATE	DESCRIPTION	ECO	BY
A	8/14/2018	RELEASE FOR PRODUCTION	15983	RLH

NOTES: (UNLESS OTHERWISE SPECIFIED)

1. ASSEMBLE ITEMS BEFORE PACKAGING PER SOP 620-7918..
2. PACKAGE ITEMS IN A MANNER THAT THEY WILL NOT BE DAMAGED DURING SHIPPING/STORAGE.
3. PACKAGE KIT IN A PLASTIC BAG WITH P/N, DESCRIPTION, REVISION, PO#. ONE KIT PER BAG.
4. LABEL PACKAGE TO INCLUDE
   a. PO NUMBER AND DATE
   b. ASSEMBLY NUMBER
   c. BAR CODE OF ASSEMBLY NUMBER (CODE 128)
   d. ASSEMBLY DESCRIPTION
   e. ASSEMBLY REVISION
   f. WEIGHT (LBS / KGs)

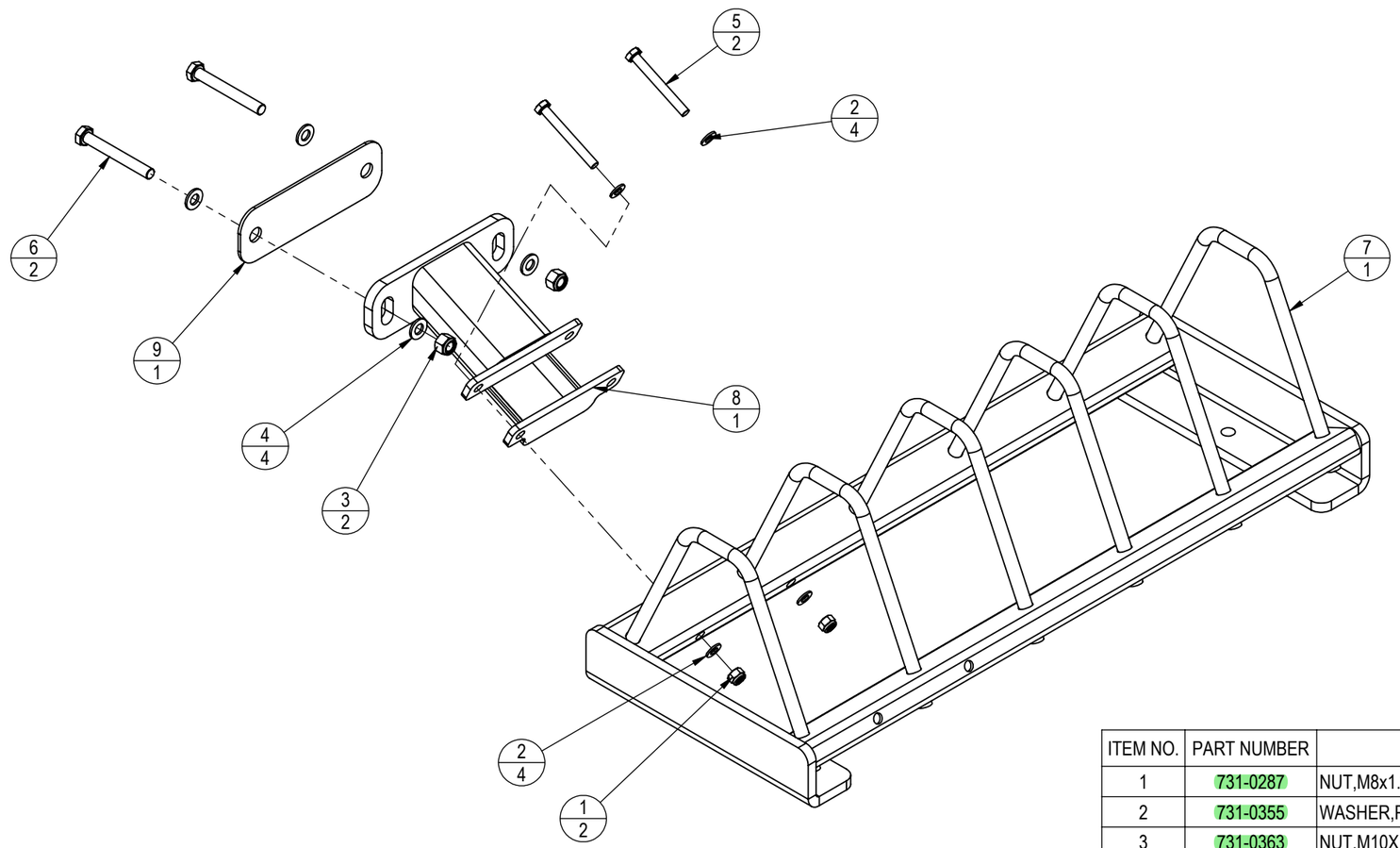

ITEM NO.	PART NUMBER	DESCRIPTION	QTY.
1	731-0287	NUT,M8x1.25,NYLOCK	2
2	731-0355	WASHER,PLAIN,M8,NARROW	4
3	731-0363	NUT,M10X1.5,NYLOC	2
4	731-0367	WASHER,PLAIN,M10	4
5	731-2356	SCREW,M8x1.25,70,HHC,HE,AS,12.9,ZP,PT	2
6	731-2400	SCREW,M10X1.5,80MM,HHC,HE,CS,BZ	2
7	731-7169	CASETTE, WEIGHT STORAGE, HALF-RACK	1
8	731-8277	WELD,STANDOFF,STORAGE	1
9	731-8278	MOUNT FLANGE	1

DOCUMENT STATUS:

NOTICE OF PROPRIETARY INFORMATION

THIS DOCUMENT SHALL NOT BE REPRODUCED NOR SHALL THE INFORMATION CONTAINED HEREIN BE USED BY OR DISCLOSED TO OTHER EXCEPT AS EXPRESSLY AUTHORIZED BY CORE HEALTH & FITNESS, LLC.

CLASS OF WORK		UNLESS OTHERWISE SPECIFIED DIMS ARE IN mm. TOLERANCES FOR MEASURE OF LENGTH ARE:							ANGLES = ±2°
		0.5 to 3	> 3 to 6	> 6 to 30	> 30 to 120	> 120 to 400	> 400 to 1000	> 1000 to 2000	> 2000
FINE		±0.05	±0.05	±0.1	±0.15	±0.2	±0.3	±0.5	-----
MEDIUM	X	±0.1	±0.1	±0.2	±0.3	±0.5	±0.8	±1.2	±2
COARSE		±0.2	±0.3	±0.5	±0.8	±1.2	±2	±3	±4
VERY COARSE		-----	±0.5	±1	±1.5	±2.5	±4	±6	±8

MATERIAL
SEE NOTES

FINISH
SEE NOTES

VENDOR: LAND AMERICA P/N: NP-L1131-05

THIRD ANGLE PROJECTION

	INITIAL	DATE
DRAWN	RLH	07/25/2018
CHECKED		
APPROVED		
	U.O.M.	MM

CORE HEALTH & FITNESS, LLC
4400 NE 77th Ave., Suite 300
Vancouver, WA 98662

CORE PART NO 731-8296 REV 001

TITLE
WEIGHT STORAGE,GLUTE DRIVE,KIT

SCALE: 1:5 | SHEET 1 OF 1 | SHEET SIZE: B

NOTES:

1. DEBURR ALL SHARP EDGES PRIOR TO WELD.
2. ALL WELDS ARE TO BE GAS METAL ARC WELDS (MIG). UNLESS OTHERWISE SPECIFIED.
3. ALL FILET WELDS TO BE MAX 6mm UNLESS OTHERWISE SPECIFIED.
4. WELD QUALITY/ PROCEDURE PER SOP. 620-7909 OR QUALITY/ENGINEERING APPROVED EQUIVALENT.
5. FINISH:
   a. ALL THREADS MUST BE PLUGGED OR MASKED PRIOR TO PRETREATMENT AND POWDER COATING.
   b. MASK ALL MARKED AREAS.
   c. PRETREATMENT AND POWDER COAT PER SOP 620-1144 OR QUALITY/ENGINEERING APPROVED EQUIVALENT.
   d. COLOR DICTATED BY SALES ORDER.
   e. SEE SOP 622-200-103 FOR PART COLOR DESIGNATOR.

REVISION HISTORY

REV	DATE	DESCRIPTION	ECO	BY
A	6/27/2018	RELEASE FOR PRODUCTION	15983	RLH
B	9/10/2018	ADD DATUM "A" PAGE 2	16012	RLH
C	2/18/2020	ADDED ITEMS 11 AND 12, ITEM 6 QTY CHANGED FROM 6 TO 2, REARANGED OTHER ITEMS	16323	AM

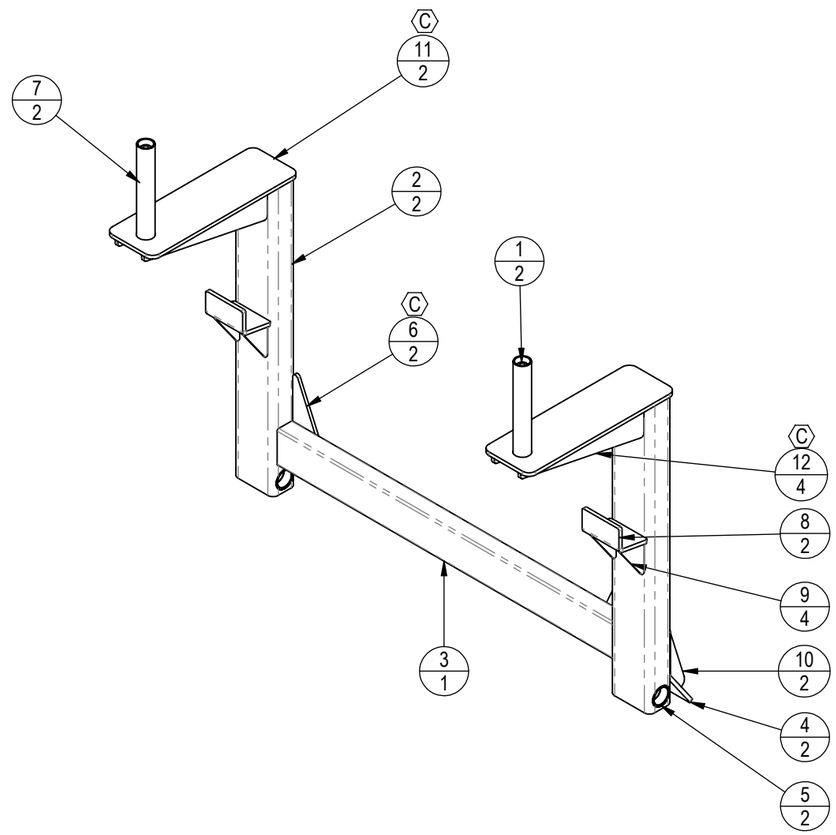

	ITEM NO.	PART NUMBER	vendorno	DESCRIPTION	QTY.
	1	731-0041	N/A	THRD PLUG,M8X1.25,25MM ID	2
	2	731-8245	NP-L1131-03-01-01	TUBE,UPRIGHT,BAR STOP	2
	3	731-8246	NP-L1131-03-01-02	TUBE,CROSS BAR,BAR CATCH	1
	4	731-8247	NP-L1131-03-01-09	PLATE,STOP,BAR CATCH	2
	5	731-8248	NP-L1131-03-01-10	MOUNT,BEARING	2
C	6	731-8249	NP-L1131-03-01-03	GUSSET,HAND GRIP	2
	7	731-8251	NP-L1131-03-01-06	TUBE,HANDLE,BAR CATCH	2
	8	731-8252	NP-L1131-03-01-04	MOUNT,STOP,BAR	2
	9	731-8253	NP-L1131-03-01-07	GUSSET,STOP,BAR	4
	10	731-8350	NP-L1131-03-01-08	GUSSET,STOP,BAR CATCH	2
C	11	731-8819		PLATE,MOUNT,GRIP, LONG	2
C	12	731-8820		GUSSET,HAND GRIP, LONG	4

DOCUMENT STATUS:
ECO

NOTICE OF PROPRIETARY INFORMATION

THIS DOCUMENT SHALL NOT BE REPRODUCED NOR SHALL THE INFORMATION CONTAINED HEREIN BE USED BY OR DISCLOSED TO OTHER EXCEPT AS EXPRESSLY AUTHORIZED BY CORE HEALTH & FITNESS, LLC.

CLASS OF WORK		UNLESS OTHERWISE SPECIFIED DIMS ARE IN mm. TOLERANCES FOR MEASURE OF LENGTH ARE:							ANGLES = ±2°
		0.5 to 3	> 3 to 6	> 6 to 30	> 30 to 120	> 120 to 400	> 400 to 1000	> 1000 to 2000	> 2000
FINE		±0.05	±0.05	±0.1	±0.15	±0.2	±0.3	±0.5	-----
MEDIUM	X	±0.1	±0.1	±0.2	±0.3	±0.5	±0.8	±1.2	±2
COARSE		±0.2	±0.3	±0.5	±0.8	±1.2	±2	±3	±4
VERY COARSE		-----	±0.5	±1	±1.5	±2.5	±4	±6	±8

MATERIAL
SEE BOM

FINISH
SEE NOTES

VENDOR: LAND AMERICA P/N: NP-L1131-03-01

THIRD ANGLE PROJECTION

	INITIAL	DATE
DRAWN	RLH	6/21/2018
CHECKED		
APPROVED		
	U.O.M.	MM

CORE HEALTH & FITNESS, LLC
4400 NE 77th Ave., Suite 300
Vancouver, WA 98662

CORE PART NO: 731-8244-XX
REV: C

TITLE: WELD,ARM,CATCH,GLUTE DRIVE

SCALE: 1:8 | SHEET 1 OF 2 | SHEET SIZE: B

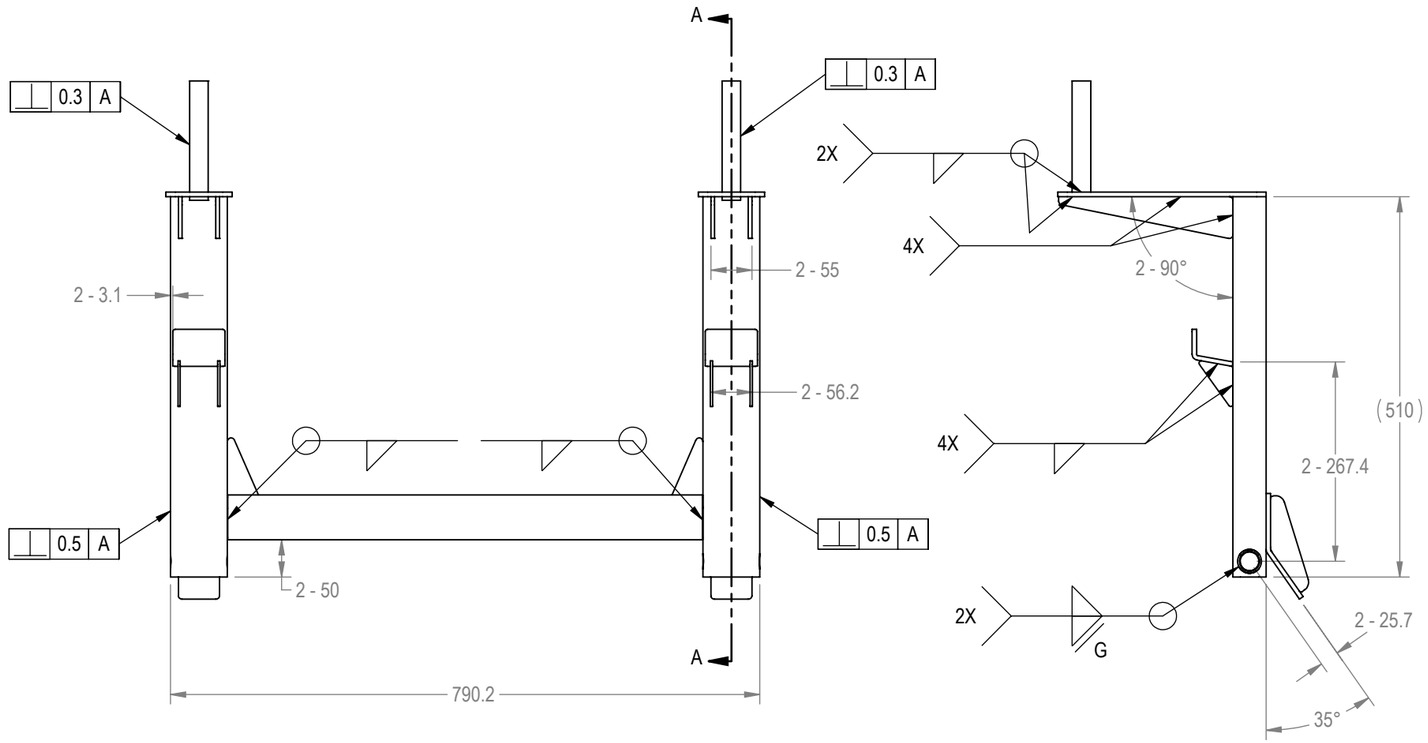

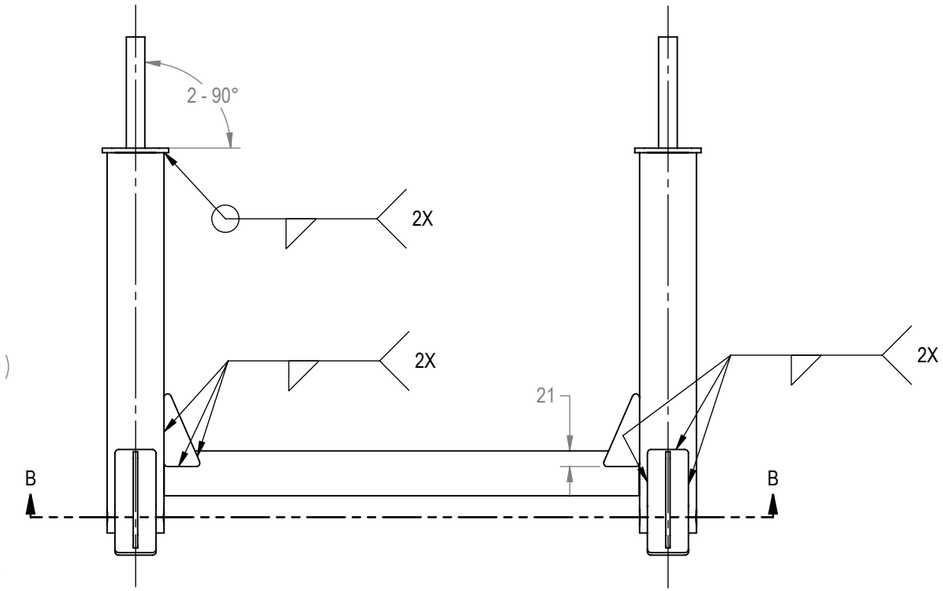

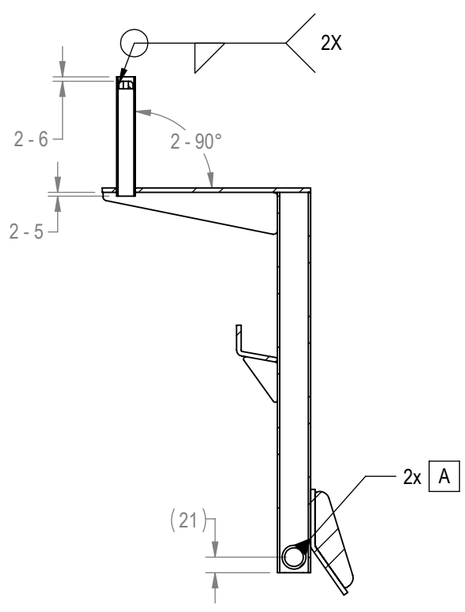

SECTION A-A

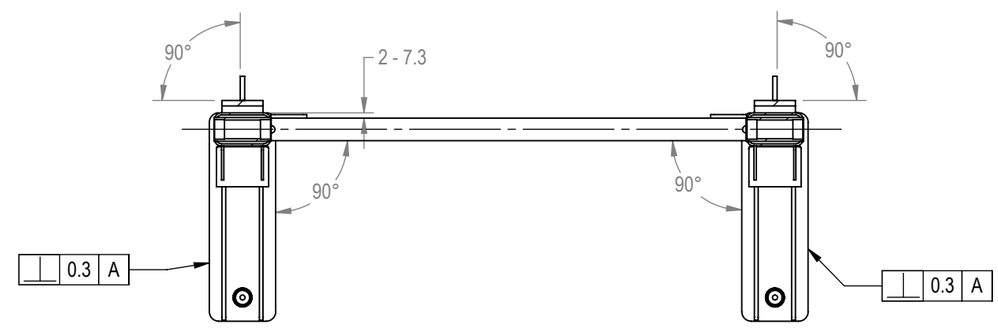

SECTION B-B

CORE HEALTH & FITNESS, LLC
4400 NE 77th Ave., Suite 300
Vancouver, WA 98662

CORE PART NO	REV
731-8244-XX	C

TITLE
WELD,ARM,CATCH,GLUTE DRIVE

SCALE: 1:8	SHEET 2 OF 2	SHEET SIZE: B